KOZI Mobil II Installation and Operation Manual

This wood burning heater is suitable for both mobil home and in house use. Read all instructions carefully before starting the installation. Save this manual for future reference.

RULES FOR SAFE INSTALLATION AND OPERATION.

1. Read these rules carefully. Failure to follow them could cause malfunction of heater, cause property damage, bodily injury and even death.

2. Inspect your heater carefully. Make yourself familier with the workings of this heater.

3. Check your local installation code. The installation must comply with their rulings.

4. Connect this heater only to an approved set of chimney. Install chimney in accordance to chimney manufacturer's instructions.

5. CREOSOTE; Formation and need for removal.

When wood is burning slowly, it produces tar and other organic vapors, which combined with expelled moisture form creosote. The creosote vapor condenses in the relatively cool chimney flue of a slow burning fire. As a result, creosote residue accumulates on the flue lining. When ignited this creosote makes an extremely hot fire.

The chimney connector and chimney should be inspected twice monthly during the heating season to determine if a creosote build-up has occured.

If a creosote has accumulated it should be removed to reduce the risk of a chimney fire.

6. The production of creosote may be reduced by burning small brisk fires and avoid the use of slow burning green or unseasoned wood.

7. Disposal of Ashes: Ashes should be placed in a metal container with a tight fitted lid. The closed container of ashes should be placed on a non-cumbustible floor or on the ground, well away from all combustible materials, pending final disposal. If ashes are disposed of by burial in soil or otherwise locally dispersed, they should be retained in the closed container until all cinders have thoroughly cooled.

8. Store fuel at a safe distance from the heater.

INSTALLATION CLEARANCES.

Maintain at least the following clearances to all combustible materials:

From the front	48 inches/122 Cm.
From the back	6 inches/ 15 Cm.
From the sides	30 inches/ 76 Cm.

For safety, avoid loaction of the heater close to an exit.

FLOOR PROTECTION.

When installing this heater on a combustible floor, a floor protector, consisting of a layer of non-combustible material at least 3/8 inch thick or 1/4 inch thick covered with sheet metal is required to cover the area under the heater, and extending to at least 18 inches/45 Cm. at the front and 8 inches/20 Cm. to the sides and rear.

CHIMNEY AND FLUE PIPE.

Beside your Kozi Mobil II heater package you require following materials:

CHIMNEY: A 6 inches diameter ULC/UL Listd, high temperature pre-fabricated insulated metal chimney must be installed according to manufacturer's instructions for smoke exit.

FLUE: A 6 inches diameter flue pipe, connecting Mobil II heater to insulated chimney, must be of ULC/UL Listed insulated pipe or ULC/UL Listed Class E flue pipe. A minimum of 9 inches 23 Cm. clearance must be maintained between Class E pipe and combustable wall.

INSTALLATION.

1. Before proceeding with installation make sure you have proper tools and enough material for installation.

2. Select a location for your heater keeping in mind

   a. The minimum clearance from the combustible object and walls.

   b. That you have cut one hole in the floor for fresh air intake to heater and another hole for insulated chimney in the ceiling. A precuation must be taken so that these holes do not fall on the joists.

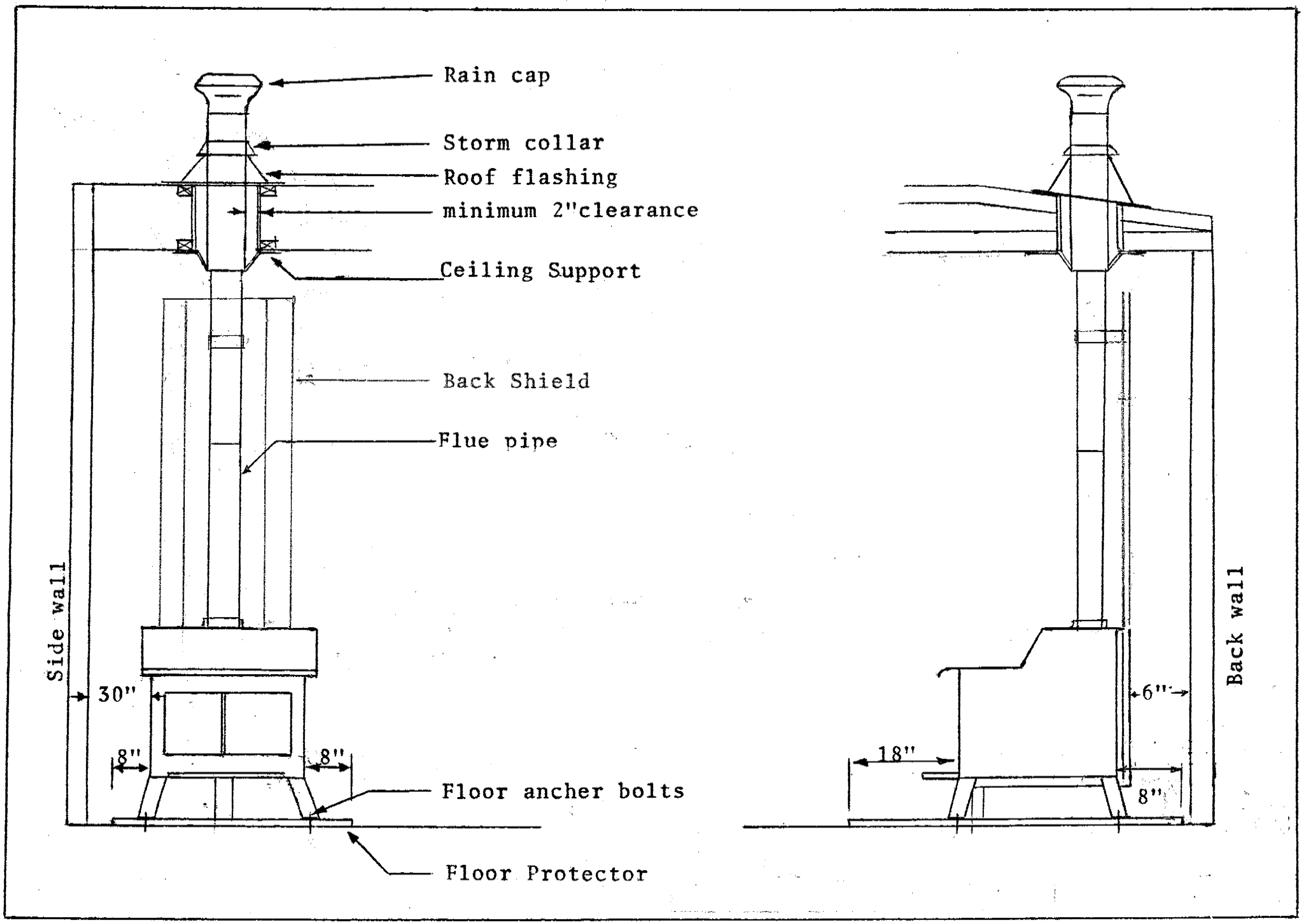

Fig 1. Typical Installation

3. Once the location has been selected install the high temperature insulated chimney through the ceiling. This chimney should extend at least 8 inches/ 20 Cm. below the ceiling.

4. Locate the center line of the chimney on the floor. This can be done by dropping a plum bob from the center of the chimney or by using a measuring tape.

5. Locate the center for fresh air intake hole on the floor Center of fresh air intake hole is 10 inches/25 Cm. in front of the center of the chimney flue.

6. Cut a hole 4.5 inches/11.5 Cm. diameter, in the floor and floor protector, for fresh air intake pipe. Install fresh air intake pipe.

7. Place your heater on the floor protector. Anchor it to the floor and connect the fresh air intake pipe to the heater.

8. Connect the chimney to the heater with flue pipe.

9. Secure and seal all joints by using ample screws and stove cement.

10 Recheck whole installation. Make sure the installation is done in proper manner and is safe.

DO NOT MODIFY THIS HEATER OR USE MAKE SHIFT INSTALLATION. IT IS A FIRE HAZARD.

OPERATION.

A. Read the following carefully before starting the heater:

1. This heater is designed for WOOD ONLY. Burn only wood. Store fuel away from heater in a dry place.

2. Do not overload this heater. Few logs (maximum 16 inches long and 3 to 4 inches in diameter) will give the best result.

3. Remove ashes after every use. Keep intake air holes clear of any obstruction.

4. Chimney should be examined bi-weekly until safe frequency is determined.

5. Operate this heater with the door closed. This heater also can be used as a fireplace (door open). As a fireplace always operate with fire screen.

B. Following precautions should be taken while using this heater.

1. Do not burn coal or charcoal. It may damage the heater.

2. Never use gasoline, gasoline type lantern fuel, charcoal lighter fluid or similar liquids to start or " FRESHEN UP " a fire in this heater. Keep all flammable liquids well away from heater while it is in use.

3. Avoid over firing of heater.

4. Do not store combustible material within clearance range of the heater. All it takes is one mistake to cause house fire.

5. Heater surfaces are HOT while in use. Keep childern, clothing and furniture away .

6. Do not operate this heater continously with the door open. It may reduce the oxygen supply of your mobil home.

C. Building a fire.

1. Open draft control to full open position.

2. Open the door. Use ample kindlings to start fire. once kindlings are burning briskly load the heater with wood.

3. To use as room heater, close the door and set draft control knob at a setting desired.

4. If heater is used as a fireplace (open door), always use it with optional wire screen.

5. Store fuel at a safe distance from the heater.

D. Caution about the chimney fire.

1. Build up of tar and creosote can ignite and cause a chimney fire, resulting in distortion of the inner lining of the chimney. If such a fire occures, your chimney should be inspected immediately and damaged parts should be replaced before further use.

E. Fire Safety. To provide reasonable fire safety the following should be given serious consideration.

1. Installation of smoke detectors.

2. A conveniently located class A fire extingushier to contend with small fires resulting from burning embers.

3. A practiced evacuation plan.

4. A plan to deal with chimney fire as follows. In the event of a chimney fire:

(a) Notify fire department.

(b) Prepare occupants for immediate evacuation.

(c) Close all opening of the stove.

(d) While awaiting fire department watch for ignition of the adjacent combustibles. Remove adjacent combustibles to avoid further spread of fire due to hot embers or sparks from chimney or heater.

OPTIONAL COMPONENTS

Wire Screen: Hooks on to door hinge brackets.

For further information on using your heater safety obtain a copy of the National Fire Protection Association Publication 'Using coal & wood stove safety' NFPA HS 10-1978. The address of NFPA is 470 Atalantic Ave, Bostan, 02210.

OR

'Heating with wood safely' published by Canada mortgage and housing corporation, Ottawa, Ontario.

Manufactured by:

A.P.R. INDUSTRIES LTD.
1354 Waverley Street
Winnipeg, Manitoba
R3T 0P5

REPAIR PARTS

Mobil home,air tight,wood burning heater
Model Kozi mobil II

Item	Part No	Description
1	2001 M	Body
2	3002	Baffel Plate
3	2003	Heat Shield
4	2004	Door set
5	3005	Leg screw
6	2006	Ash tray
7	3007	Fire bricks
8	2008	Door gasket
9	2009	Air manifold
10	3010	Coil Handle
11	2011	Inlet shutter
12	3012	Shutter spring
13	3013	Draft indicator plate
14	3014	Retainer plate
15	3015	Cotter pin
16	3016	Draft control Knob
18	3018	Outdoor air Kit
19	2019	Glass for doors

To order parts please provide following information

1. Model Number
2. Serial Number
3. Part Number
4. Description

repair parts

AIR-TIGHT, WOOD BURNING ROOM HEATER – MODELS

MOBIL II

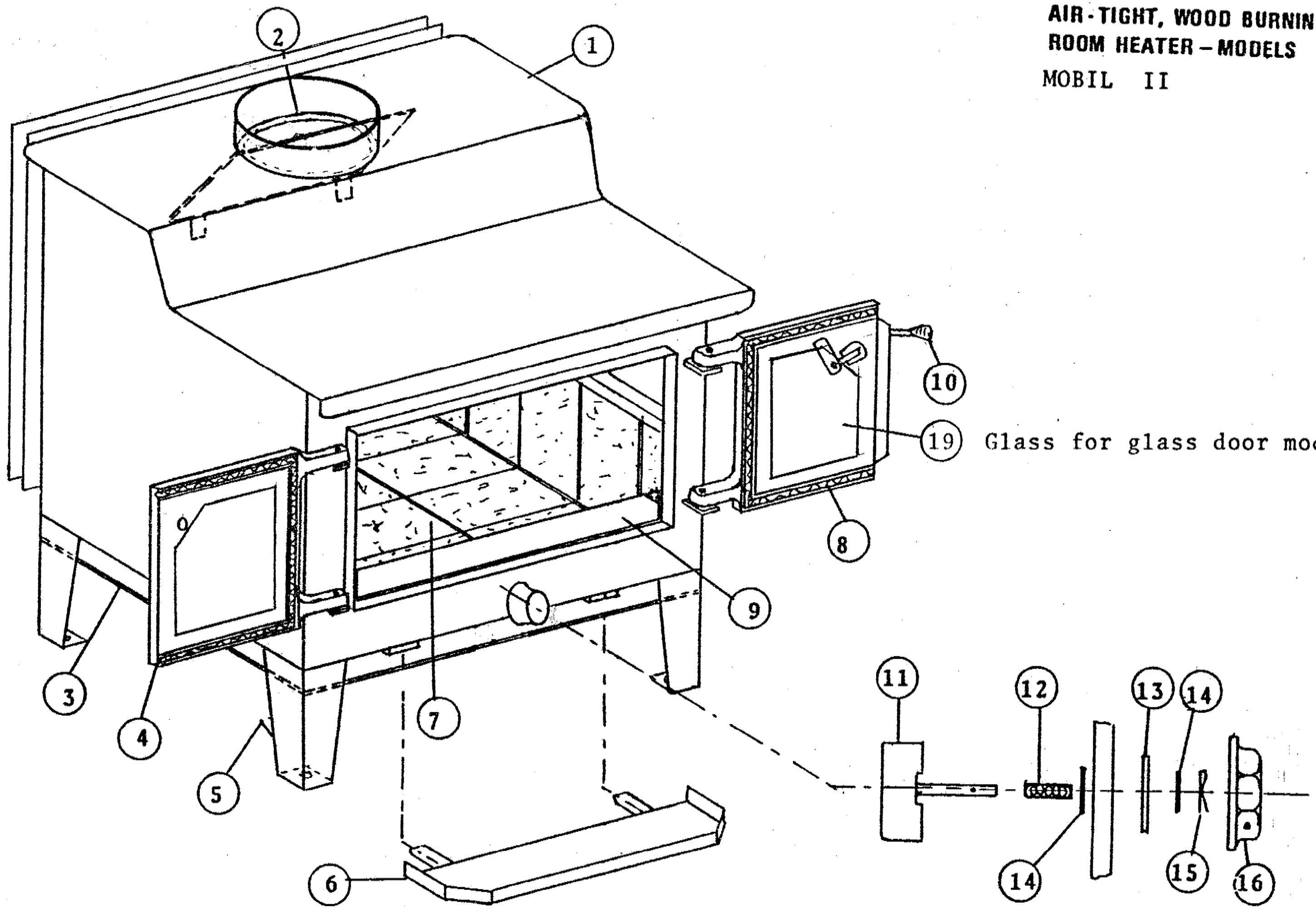

19 Glass for glass door models

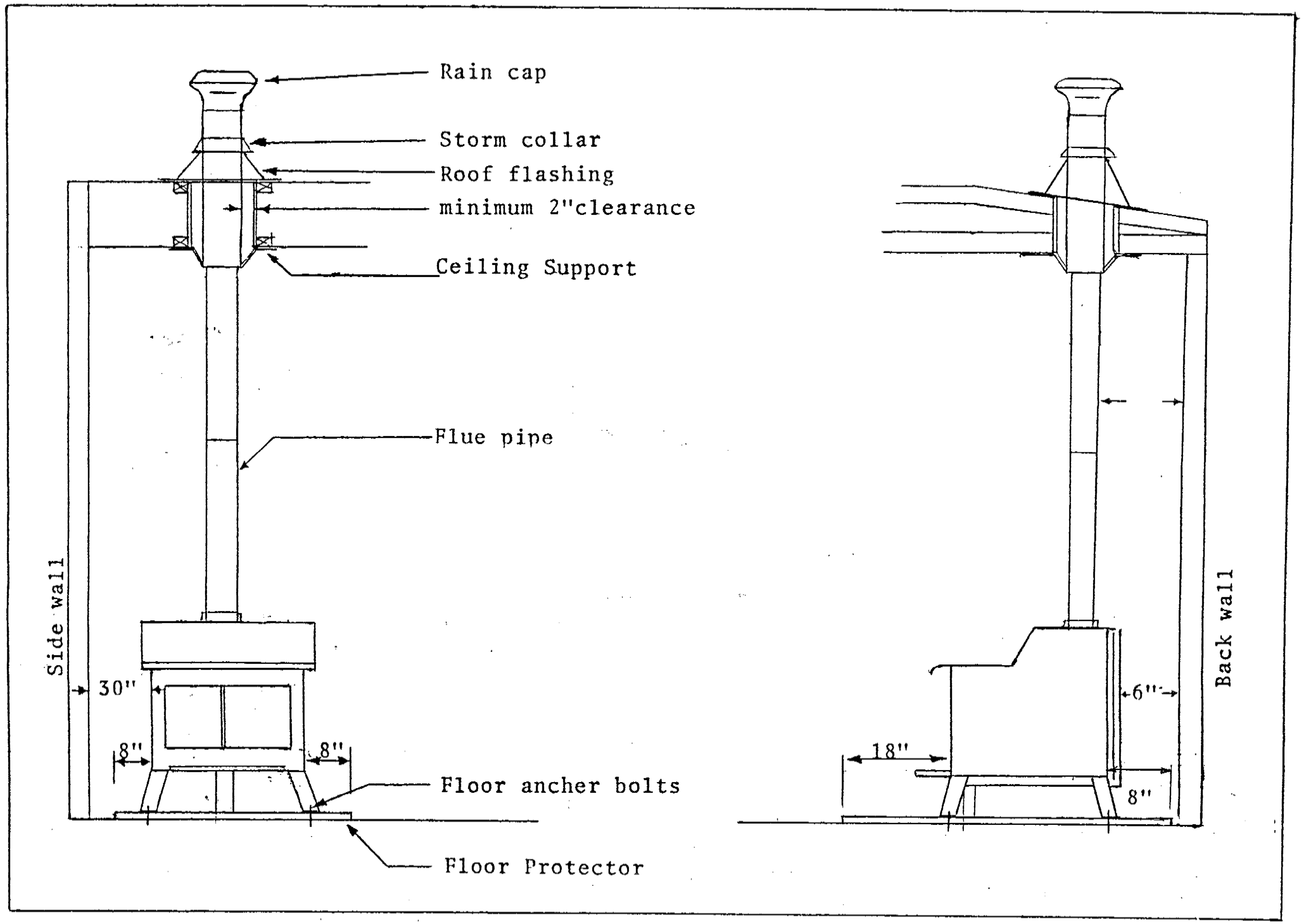

Fig 1. Typical Installation

REPAIR PARTS

Mobil home,air tight,wood burning heater
Model Kozi mobil II

Item	Part No	Description
1	2001 M	Body
2	3002	Baffel Plate
3	2003	Heat Shield
4	2004	Door set
5	3005	Leg screw
6	2006	Ash tray
7	3007	Fire bricks
8	2008	Door gasket
9	2009	Air manifold
10	3010	Coil Handle
11	2011	Inlet shutter
12	3012	Shutter spring
13	3013	Draft indicater plate
14	3014	Retainer plate
15	3015	Cotter pin
16	3016	Draft control Knob
18	3018	Outdoor air Kit
19	2019	Glass for doors

To order parts please provide following information

1. Model Number
2. Serial Number
3. Part Number
4. Description